PROJECT 37: Design and Analysis of 2-Bit Binary Multiplier using Half Adders by using Cadence Virtuoso

A Comprehensive Study of Analog Circuits

By: Priya Chaudhary, Astitva Johri and Bhavya Solanki

Chapters:

List of Figures……..…… 3

1. Introduction …….. 4
2. Brief Description…… 5
3. Circuit Design……. 6-8
   3.1 Schematic Design……... 6
   3.2 Simulation Setup...…….. 6
   3.3 Transient Response……. 6
4. Simulation Results…….. 9
5. Advantages and Disadvantages…….. 10
   5.1 Advantages……. 10
   5.2 Disadvantages……. 10
6. Conclusion…….. 11
7. Frequently Asked Questions (FAQs)…….. 12

LIST OF FIGURES

Figure 3.1 Circuit of EXOR Gate …..……..…..... 7

Figure 3.2 Circuit of AND Gate ……. 7

Figure 3.3 Circuit of Half Adder ……..…. 8

Figure 3.4 Circuit of 2-Bit Binary Multiplier ……..... 8

Figure 4.1 Simulation Result of 2-Bit Binary Multiplier 9

1. INTRODUCTION

Binary multiplication is one of the fundamental arithmetic operations performed in digital circuits. A 2-bit binary multiplier is a simple combinational circuit that multiplies two 2-bit binary numbers to produce a 4-bit binary product. Such multipliers serve as essential building blocks in arithmetic logic units (ALUs) and digital signal processing (DSP) applications. They are widely used in microprocessors, embedded systems, and digital arithmetic units for computations.

A 2-bit binary multiplier consists of basic logic gates such as AND gates and half adders, which facilitate multiplication and addition operations. Unlike traditional multiplication, which involves iterative addition, a binary multiplier directly computes the product through logical operations. The use of Cadence Virtuoso for designing and simulating this circuit ensures high accuracy in performance evaluation and layout design, enabling the creation of efficient and optimized digital circuits.

Understanding the working of a 2-bit binary multiplier provides a strong foundation for designing more complex multipliers and arithmetic circuits. The implementation of such circuits using half adders simplifies the design while maintaining efficiency in computation.

2. BRIEF DESCRIPTION

The 2-bit binary multiplier takes two 2-bit binary numbers as input and generates a 4-bit binary product. The multiplication process involves the following steps:

1. Performing bitwise AND operations between input bits to generate partial products.
2. Adding the partial products using half adders to obtain the final product.

Logic Diagram of a 2-bit Binary Multiplier:

- Let A1A0 and B1B0 be the two 2-bit binary numbers.
- The multiplication results in a 4-bit output P3P2P1P0.
- The circuit comprises four AND gates and two half adders to perform addition of partial products.

Boolean Equations:

- P0 = A0 * B0
- P1 = (A1 * B0) XOR (A0 * B1)
- Carry1 = (A1 * B0) AND (A0 * B1)
- P2 = (A1 * B1) XOR Carry1
- P3 = (A1 * B1) AND Carry1

3. CIRCUIT DESIGN

3.1 Schematic Design

1. Open Cadence Virtuoso and create a new schematic cell.
2. Add basic logic gates: AND gates for generating partial products and half adders for summation.
3. Connect the inputs A1, A0, B1, B0 to the respective AND gates to generate intermediate product terms.
4. Use half adders to sum the partial products and generate the final 4-bit output (P3P2P1P0).
5. Verify the connections and check for electrical rule violations (ERC).
6. Save and validate the schematic before proceeding to simulation.

3.2 Simulation Setup

1. Open the Analog Design Environment (ADE) in Cadence Virtuoso.
2. Select the appropriate transient analysis settings with a sufficient simulation time to capture the multiplication process.
3. Apply binary input signals (00, 01, 10, 11) to test all possible cases.
4. Define voltage sources for power supply and ground connections.
5. Run a transient simulation to observe the circuit behavior over time.
6. Analyze the output waveform to verify that the 4-bit product is correctly generated.

3.3 Transient Response

- The transient response graph shows the output variations over time as input transitions occur.
- Proper signal propagation and delay characteristics can be analyzed to ensure correct operation.
- Waveforms of the output P3P2P1P0 should match the expected binary multiplication results.

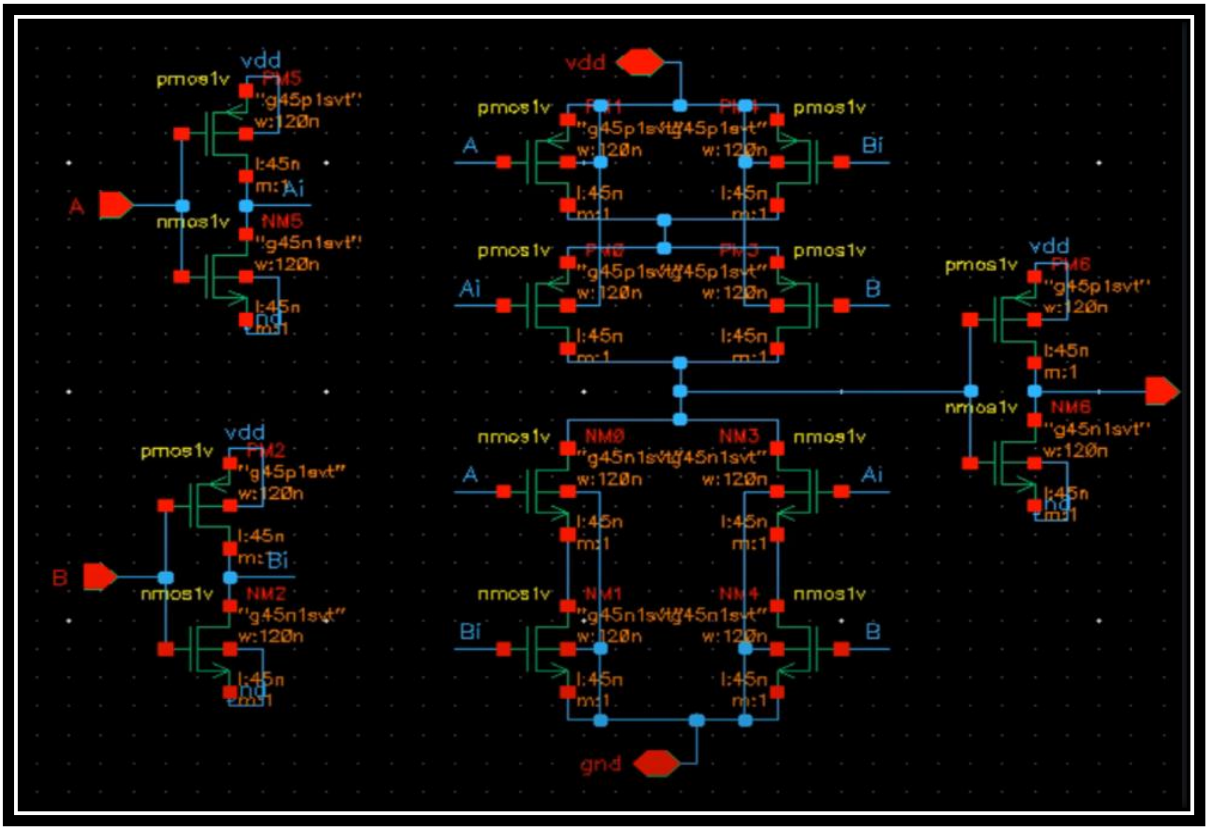

Figure 3.1 Circuit of EXOR Gate

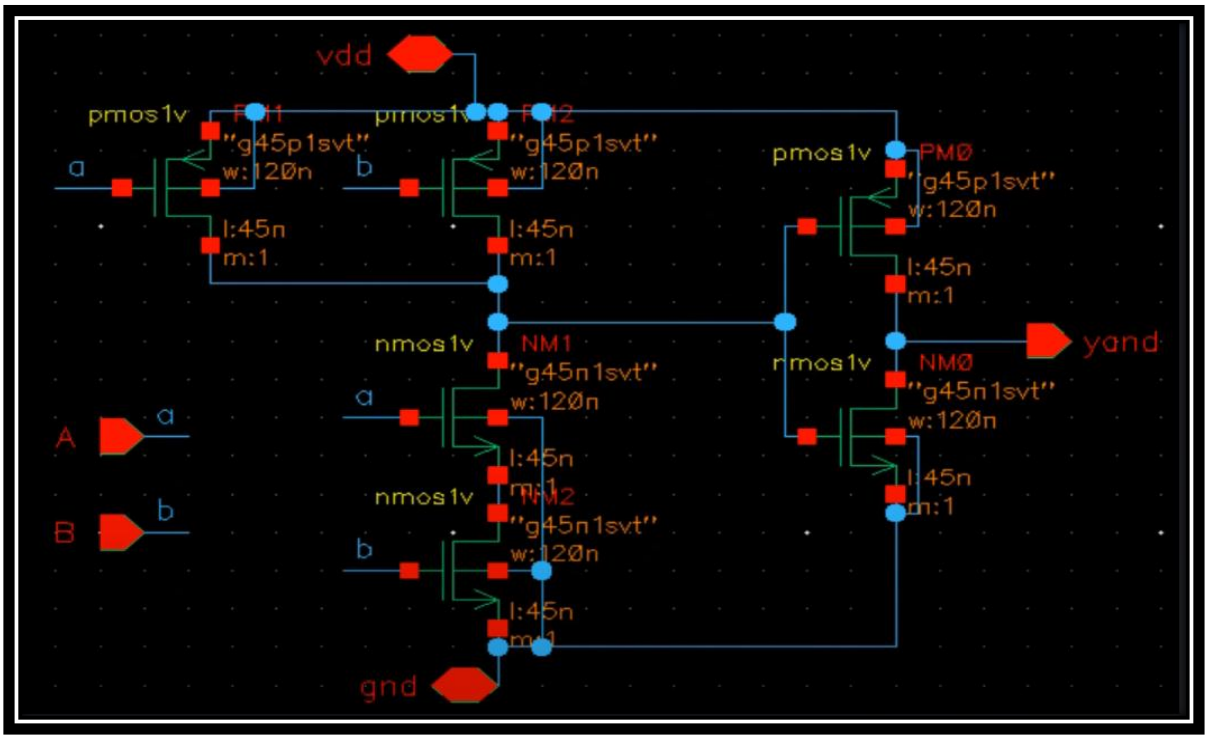

Figure 3.2 Circuit of AND Gate

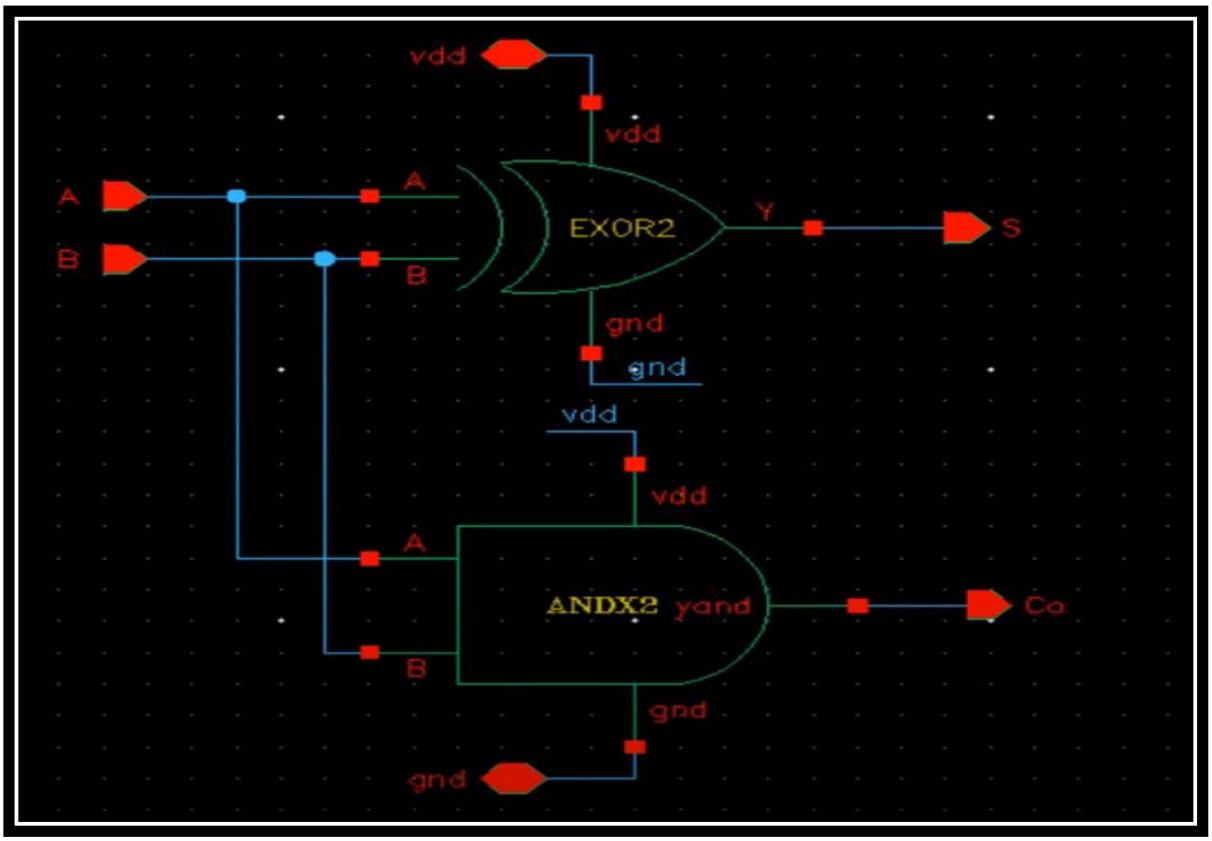

Figure 3.3 Circuit of Half Adder

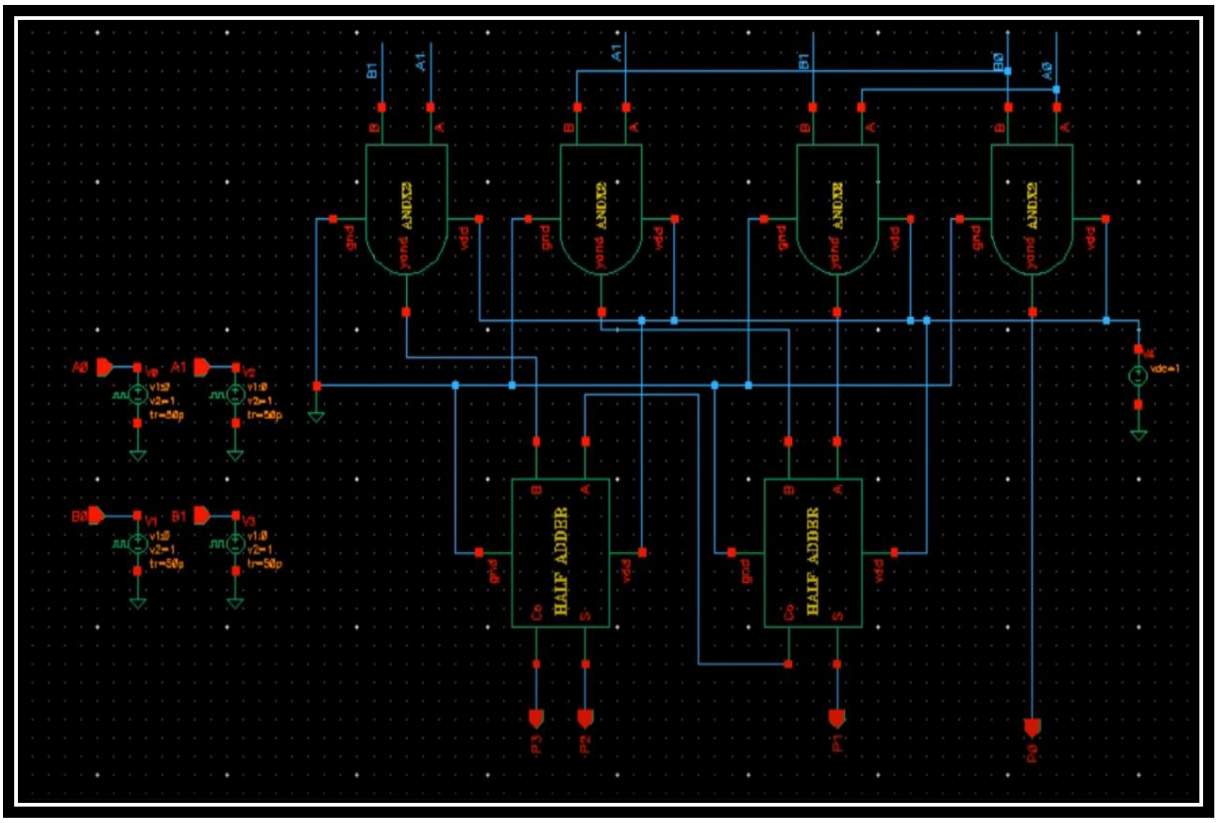

Figure 3.4 Circuit of 2-Bit Binary Multiplier

4. SIMULATION RESULTS

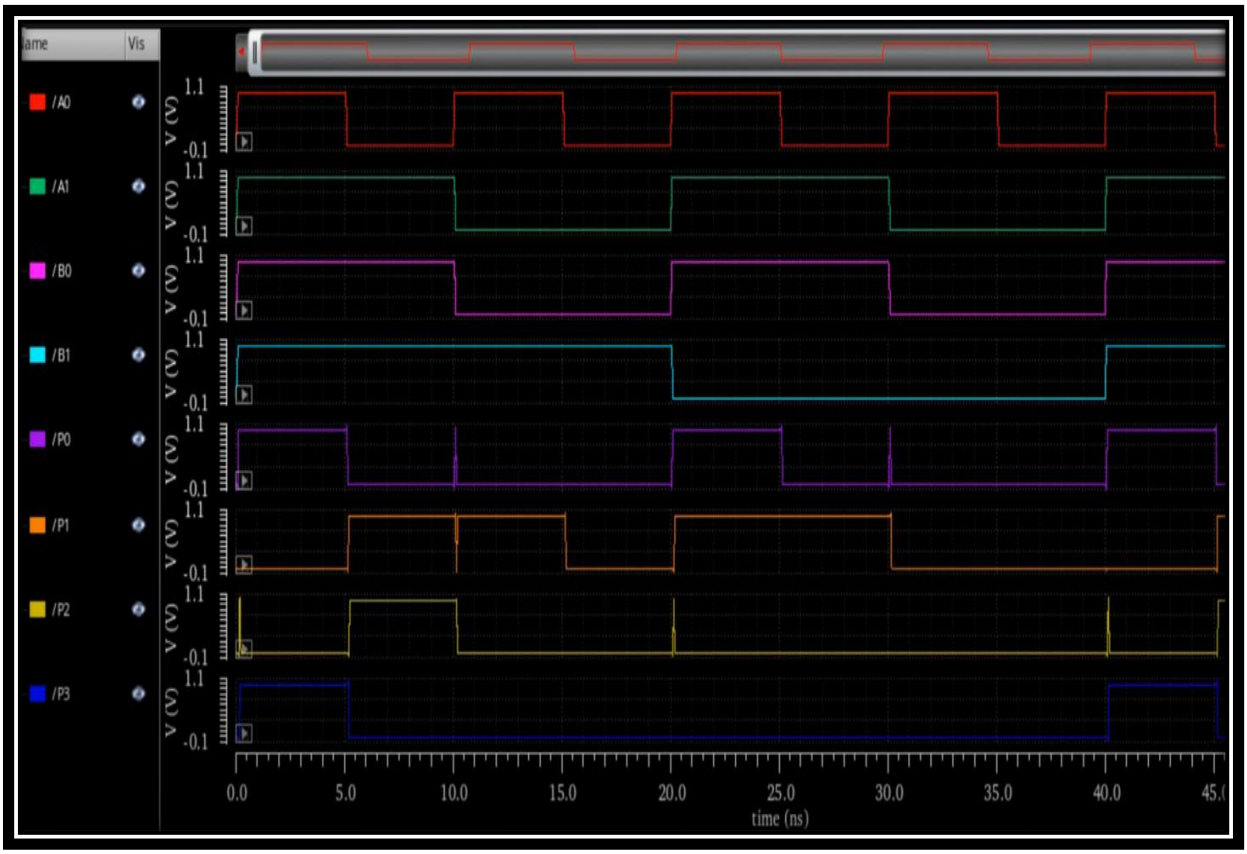

Figure 4.1: Simulation Results of 2-Bit Binary Multiplier

5. ADVANTAGES AND DISADVANTAGES

5.1 Advantages:-

1. **Efficient Computation:** Simple combinational logic results in fast multiplication.
2. **Minimal Hardware:** Uses basic logic gates and half adders, reducing circuit complexity.
3. **Easy Implementation:** Can be easily designed and simulated in Cadence Virtuoso.

5.2 Disadvantages:-

1. **Scalability Issues:** Becomes inefficient for larger bit multiplications.
2. **No Carry Propagation:** Limited to small-scale multiplications without full adders.
3. **High Power Consumption:** Increased gate count leads to higher power usage in complex circuits.

6. CONCLUSION

The design and analysis of a 2-bit binary multiplier using half adders provide significant insights into the implementation of basic arithmetic circuits in digital electronics. This design showcases how simple combinational logic gates can be effectively utilized to perform binary multiplication efficiently. The circuit is highly optimized for small-scale applications but presents limitations when extended to larger bit-width multiplications, where full adders and more complex logic circuits become necessary.

Cadence Virtuoso serves as an essential tool for designing, simulating, and verifying the circuit performance, ensuring that the design meets practical requirements. The ability to analyze such circuits in a simulation environment helps engineers optimize power consumption, reduce area, and enhance overall performance. The knowledge gained from this design can be extended to develop more sophisticated multipliers, including 4-bit, 8-bit, and higher-order multipliers, which find applications in modern computing and embedded systems.

Despite its limitations, the 2-bit binary multiplier forms the foundation for understanding binary arithmetic and digital computation. By refining this design and incorporating advanced techniques such as pipelining and parallel processing, designers can enhance computational speed and efficiency in larger digital systems.

7. FREQUENTLY ASKED QUESTIONS (FAQs)

Q1. Why use half adders instead of full adders in the design?

Answer: Since the circuit only involves two-bit numbers, carry propagation is minimal, making half adders sufficient for addition.

Q2. Can this design be extended to a 4-bit multiplier?

Answer: Yes, but it would require additional logic gates and full adders to manage carry propagation effectively.

Q3. Why use Cadence Virtuoso for designing the circuit?

Answer: Cadence Virtuoso provides an accurate simulation environment with a schematic editor and layout design tools for verifying circuit performance.

Q4. What improvements can be made to this design?

Answer: Using full adders, optimizing gate count, and implementing pipeline stages can improve performance and scalability.

Q5. How does this multiplier compare to a serial multiplier?

Answer: A parallel 2-bit multiplier like this provides faster computation compared to a serial multiplier, which requires multiple clock cycles for processing.